# A Paradigm of Checking Noise Behaviour

Himanshu Dehra

***Abstract*—**This paper presents novel concept of 'Noise Behaviour: Paradigm & Therapy in New Dimensions'. A paradigm of examining human noise behaviour is summarized. Noise characterization and conception of redefining psychoacoustics is presented. Noise sources, noise measurement equations and noise filters are defined and illustrated. Solar energy acoustics, human comfort and health are correlated with human brain through physiological responses.

***Keywords*—**Human brain, noise behaviour, noise characterization, physiological responses, psychoacoustics.

## I. Introduction

NOISE, defined as 'a sensation of unwanted intensity of a wave', is perception of a pollutant and a type of environmental stressor. An environmental stressor such as noise may have detrimental effects on various aspects of health. The unwanted intensity of a wave is a propagation of noise due to transmission of waves (viz. physical agents) such as light, sound, heat, electricity, fluid and fire [1]. A unified theory for stresses and oscillations is applicable so as to take into effect of all the physical agents as an environmental stressor on a human body [1]-[5]. As per the theory, the stresses developed on a particle due to various forces are classified as fundamental stresses, internal stresses, and external stresses. The fundamental stresses are developed due to presence of gravitational and electromagnetic forces of a solar system. The internal stresses are developed under the influence of fundamental stresses and are defined by properties and composition of a particle. The external stresses are developed under the existence of an external source of energy. The omnipresent characteristic of the urban environment is its exposure to environmental noise. The excessive noise is accepted by the public health doctors and professionals as an undesirable feature of the urban environment. Noise is indisputably perceived to be an irritant, interfering into personal privacy, and causing displeasure and diminishing the worth of a person and his health. As health is largely defined to include quality of life and displeasure, therefore noise undoubtedly affects health.

The effects of stress due to noise of physical agents are consideration to contribute to a range of disorders as wide as impairment of hearing, cancer, heart disease, musculoskeletal conditions, skin disease, gastrointestinal and other disorders. The evidence is strongest for links between certain types of prolonged stress and heart disease, hypertension, and mental illness. Most of the evidence for such links is epidemiological. It is possible that what is bad for the individual employee is also bad for the organisation. Organisational worries connected with work related stress include high absenteeism, increased staff turnover, low job satisfaction, low morale, poor organisational commitment, poor performance and productivity, possible increased accident and near miss rates, and, in some cases, an increase in employee and client complaints and litigation.

All such unwanted disturbances of noise caused by a person or deviation from a normal behaviour so as to distract attention of a normal person are termed as 'Noise behaviour'. There is always a source of noise and a sink of noise i.e. a person making the noise in the environment and a person affected by such noise in the environment. A person making the noise in the environment is also affected. The occurrences of noise related stress alters the way people think, feel, and behave. Many of the changes that occur are diffident and potentially reversible, although harmful to the person's value of life at the time. Other changes may be more enduring, and have substantial consequences for health. Behavioural changes include increases in health risk behaviour, such as smoking and drinking, and decreases in health positive behaviour, such as exercise and relaxation. Many behavioural changes represent attempts to cope with the emotional experience of stress due to noise—for example, by making noise due to presence of physical agents in the environment or because of other person's noise behaviour in the form of polluting the environment. The noise in the environment is associated with poor decision making, impaired concentration, reduced attention span, impaired memory, and confusion. People who report under stress due to noise also admit that not being able to think straight forward. Social behaviour and interpersonal relations of the person affected by noise may also be demolished, possibly reflecting these and other psychological changes such as tiredness and increased irritability.

This paper has summarized noise characterization, definitions, noise measurements, solar energy acoustics, noise filters & examples, sensors & transducers for a human brain and comfort & health. Appendix has presented contents of the proposed book **"Noise Behaviour: Paradigm & Therapy in New Dimensions".**

## II. Noise Characterization

### *A. Source & Sink of Noise*

A line normal to the plane, from which energy is imagined to flow uniformly in all directions at right angles to it, is a source. It appears as a point in the customary two-dimensional

Himanshu Dehra is with Egis India Consulting Engineers Pvt. Ltd. (cell phone: +91 9560052596; e-mail: anshu_dehra@hotmail.com).

energy flow diagram. The total energy flow per unit time and unit length of line is called the strength of the source. As the flow is in radial lines from the source, the current of energy flow is at a distance r from the source, which is determined by the strength divided by the energy flow area [6].

### *B. Psychoacoustics in New Dimensions*

The standard sources of noise along with their definitions, their measurement equations and measurement units are presented. A contemporary theory of psychoacoustics is presented for characterization of interference of noise waves due to difference of power of two intensities [7]-[9]. The difference of two intensities of power is due to transmission of light, sound, heat, electricity, fluid, and fire into a particle body. The sources of noise are classified according to the type of wave of interference, such as light, sound, heat, electricity, fluid, and fire. The criteria for definitions of noise are based on areas of energy stored in a wave, due to interference, speed of wave, and difference of power between two intensities of wave. Noise filters as per source of noise signals from noise power systems are differentiated for filtering unwanted frequencies from solar power, electric power, light power, sound power, heat power, fluid power and fire power.

The interference of noise arises due to difference of power of two intensities [1]-[5]. The intensity of power for any particle body is a function of development of various stresses. The phenomenon of acoustic resonance arises due to matching of critical stress level with the natural stress level necessary for oscillation of a particle body. The criteria for generation of acoustic resonance include waves propagated with transmission of light, sound, noise, heat, electricity, fluid and fire from a particle body. The psychological feeling of sensation and perception of noise from light, sound, heat, electricity, fluid and fire is a physiological response from the sensory organs of a standard (average) human body.

### *C. Sources of Noise*

The sources of noise are classified according to the type of wave of interference [1]-[5].

**Light:** The light is a visual sensation evaluated by an eye with seeing of a radiant energy in the wavelength band of electromagnetic radiation from approximately between 380-765 nm. The units of light are based on the physiological response of a standard (average) eye. The human eye does not have the same sensitivity to all wavelengths or colors. The solar energy spectrum in the visible region contributes in adding daylight as a visual sensation to the human body.

**Sound:** The sound is a hearing sensation evaluated by ear due to fluid pressure energy in the frequency band approximately between 20 Hz and 20,000 Hz. The units of sound are based on the physiological response of the standard (average) ear. The human ear does not have the same sensitivity to the whole frequency band.

**Heat:** The heat is a sensation of temperature evaluated by a radiant energy in the wavelength band of electromagnetic radiation from approximately between 0.1 μm to 100 μm. The units of heat are function of sensation of temperature. The sensation of temperature is a measure of hotness and coldness. Thermal comfort is an evaluation of comfort zone of temperature on the basis of physiological response of a standard (average) human body. The solar energy spectrum in the ultra violet radiation region contributes to sensation of discomfort of the human body.

**Electricity:** The electricity is a sensation of shock evaluated by skin of an observer due to an electromagnetic energy stored in a conductor short-circuited by a human body either due to pass of direct current or an alternating current.

**Fluid:** The fluid is a combined sensation of ventilation and breathing evaluated by the amount of fluid passed either externally or internally through a standard (average) human body.

**Fire:** The fire is a sensation of burning caused due to combined exposure of skin to radiation energy and fluid acting on a standard (average) human body.

## III. Definitions

The criteria for definitions of noise are based on areas of energy stored in a wave due to interference, speed of wave and difference of power between two intensities of wave.

**Noise of Sol:** The noise of sol (S) is noise occurring due to difference of intensities of power between two solar power systems. The amplitude of a solar energy wave is defined as the power storage per unit area per unit time.

The solar power is stored in a packet of solar energy wave of unit cross sectional area and of length s, the speed of light.

**Noise of Therm:** The noise of therm is noise due to difference of intensities of power between two heat power systems. The amplitude of a heat wave is defined as the power storage per unit area per unit time.

The heat power is stored in a packet of heat wave of unit cross sectional area and of length s, the speed of light.

**Noise of Photons:** The noise of photons is noise due to difference of intensities of power between two lighting power systems. The amplitude of a light beam is defined as the power storage per unit area per unit time. The light power is stored in a packet of light beam of unit cross sectional area and of length s, the speed of light.

**Noise of Electrons:** The noise of electrons is noise due to difference of intensities of power between two electrical power systems. The amplitude of an electricity wave is defined as the power storage per unit area per unit time. The electrical power is stored in a packet of an electricity wave of unit cross sectional area and of length s, the speed of light.

**Noise of Scattering:** The noise of scattering is noise due to difference of intensities of power between two fluid power systems. The amplitude of a fluid wave is defined as the power storage per unit area per unit time. The fluid power is stored in a packet of fluid energy wave of unit cross sectional area and of length s, the speed of fluid.

**Noise of Scattering and Lightning:** The noise of scattering and lightning is a noise due to difference of intensities of power between two fire power systems. The amplitude of a flash of fire is defined as the power storage per unit area per unit time. The fire power of light is stored in a packet of flash

of fire of unit cross sectional area and of length s, the speed of light. The fire power of fluid is stored in a packet of flash of fire of unit cross sectional area and of length s, the speed of fluid.

**Noise of Elasticity:** The noise of elasticity is a noise due to difference of intensities of power between two sound power systems. The amplitude of a sound wave is defined as the power storage per unit area per unit time. The sound power is stored in a packet of sound energy wave of unit cross sectional area and of length s, the speed of sound.

## IV. Noise Measurements

The following standard measurement equations are derived and adopted from the standard definitions for sources of noise interference [9]:

**Noise of Sol:** The solar power intensity I is the product of total power storage capacity for a packet of solar energy wave and the speed of light. The logarithm of two solar power intensities, $I_1$ and $I_2$, gives power difference for two solar power intensities. It is mathematically expressed as:

$$Sol = \log(I_1)(I_2)^{-1} \quad (1)$$

Where, Sol is a dimensionless logarithmic unit for noise of sol. The oncisol (oS) is more convenient for solar power systems. Since an oncisol (oS) is $1/11^{th}$ unit of a Sol, it is mathematically expressed by the equation:

$$oS = 11\log(I_1)(I_2)^{-1} \quad (2)$$

**Noise of Therm:** The heat power intensity I is the product of total power storage capacity for a packet of heat energy wave and the speed of light. The packet of solar energy wave and heat energy wave, have same energy areas, therefore their units of noise are same as Sol.

**Noise of Photons:** The light power intensity I is the product of total power storage capacity for a packet of light energy wave and the speed of light. The packet of solar energy wave and light energy wave, have same energy areas, therefore their units of noise are same as Sol.

**Noise of Electrons:** The electrical power intensity I is the product of total electrical storage capacity for a packet of electricity wave and the speed of light. The packet of solar energy wave and an electricity wave, have same energy areas, therefore their units of noise are same as Sol.

**Noise of Scattering:** The fluid power intensity I is the product of total power storage capacity for a packet of fluid energy wave and the speed of fluid. The logarithm of two fluid power intensities, $I_1$ and $I_2$, gives power difference for two fluid power intensities. It is mathematically expressed as:

$$Sip = \log(I_1)(I_2)^{-1} \quad (3)$$

Where, Sip is a dimensionless logarithmic unit for noise of scattering. The oncisip (oS) is more convenient for fluid power systems. Since an oncisip (oS) is $1/11^{th}$ unit of a Sip, it is mathematically expressed by the equation:

$$oS = 11\log(I_1)(I_2)^{-1} \quad (4)$$

The water is a standard fluid used with a specific gravity of 1.0 for determining the energy area for a fluid wave.

**Noise of Scattering and Lightning:** The intensity, I, of flash of fire with power of light, is the product of total power storage capacity for a packet of fire wave and the speed of light. The intensity, I, of flash of fire with power of fluid, is the product of total power storage capacity for a packet of fire wave and speed of fluid.

The combined effect of scattering and lightning for a noise due to flash of fire is to be determined by superimposition principle.

- The packet of solar energy wave and a flash of fire with power of light, have same energy areas, therefore their units of noise are same as Sol. The flash of fire with power of light may also include power of therm.
- The packet of fluid energy wave and a flash of fire with power of fluid, have same energy areas, therefore their units of noise are same as Sip. A multiplication factor of a specific gravity of fluid is used in determining the areas of energy for the case of fluids other than water.

**Noise of Elasticity:** The sound power intensity I is the product of total power storage capacity for a packet of sound energy wave and the speed of sound. The logarithm of two sound power intensities, $I_1$ and $I_2$, gives power difference for two sound power intensities. It is mathematically expressed as:

$$Bel = \log(I_1)(I_2)^{-1} \quad (5)$$

Where, Bel is a dimensionless logarithmic unit for noise of elasticity. The oncibel (oB) is more convenient for sound power systems. Since an oncibel (oB) is $1/11^{th}$ unit of a Bel, it is mathematically expressed by the equation:

$$oB = 11\log(I_1)(I_2)^{-1} \quad (6)$$

### *A. Limiting Conditions*

The Table 1 summarises units of noise and their limiting conditions.

TABLE I
NOISE UNDER LIMITING CONDITIONS

| **Reference[a] ($I_2$ = ±1 Wm$^{-2}$)** | **Noise Scales and limiting Conditions** | | |
|---|---|---|---|
| | **Noise of Sol** | **Noise of Scattering** | **Noise of Elasticity** |
| **Units** | **Sol** | **Sip** | **Bel** |
| **$I_1$ = 1 Wm$^{-2}$** | No Positive Solar Energy | No Positive Fluid Energy | No Positive Sound Energy |
| **$I_1$ = 1+→0 Wm$^{-2}$** | Decreasing Solar Energy | Decreasing Fluid Energy | Decreasing Sound Energy |
| **$I_1$= + ve** | Increasing Solar Energy | Increasing Fluid Energy | Increasing Sound Energy |
| **$I_1$ = -1 Wm$^{-2}$** | Negative Solar Energy | Negative Fluid Energy | Negative Sound Energy |
| | Darkness | Low Pressure | Inaudible range |
| **$I_1$ = -ve** | Darkness increasing, distance from point source of light increasing | Low pressure increasing, vacuum approaching | Inaudible range increasing, vacuum approaching |
| **$I_1$ = -1+→0 Wm$^{-2}$** | Negative Solar Energy | Negative Fluid Energy | Negative Sound Energy |
| | Decreasing Darkness | Decreasing Low Pressure | Decreasing inaudible range |
| * Reference value of $I_2$ = ±1 Wm$^{-2}$ signifies the limiting condition with areas of noise interference approaching to zero. | | | |

There are three reasons for choosing an *onci* as $1/11^{th}$ unit of noise: i) Reference value used for $I_2$ is -1 W m$^{-2}$ on positive scale of noise and 1 W m$^{-2}$ on negative scale of noise. In a

power cycle, all types of wave form one positive power cycle and one negative power cycle [2]. Positive scale of noise has 10 positive units and one negative unit. Whereas, negative scale of noise has 1 positive unit and 10 negative units; ii) each unit of sol, sip and bel is divided into 11 parts, 1 part is $1/11^{th}$ unit of noise; and iii) the base of logarithm used in noise measurement equations is 11.

## V. Solar Energy Acoustics

The life and its activities are reliant upon the sun's radiant energy which apart from the earth is also stocked up by green plants. In addition to the primary role of light in living economy, a continual environment of mixed radiations from various sources of radiations produce other effects, reactions and adaptations, which have susceptibility to influence the life activities of the living organisms living in a continual environment [6]. The solar radiation is passed through the earth's atmosphere and while passing, the solar radiation is reflected, scattered, and absorbed by gas molecules, ozone, water vapour, clouds and dust. The length of atmospheric path travel by sun rays is determined by the air mass *m*, the ratio of the mass of atmosphere in the actual earth-sun path to the mass which would exist if the sun were directly overhead at sea level ($m$=1.0).

The sunlight is the major source of radiations on the earth. The spectrum of sunlight includes ultraviolet radiation, visible light, infrared rays and radio waves. The x-rays are generated by solar flares and their ionization due to absorption occurs high in the earth's atmosphere. X-rays also reach the earth's atmosphere from various celestial sources. About 60 per cent of the energy of sunlight is in the invisible infrared region's indefinite limit in radiation spectrum of sunlight. The sunlight radiations of shorter wavelengths are absorbed in the earth's atmosphere before such radiations reach the surface of earth. The ozone layer is formed high above the atmosphere through absorption of ultraviolet radiation by oxygen. The reversible reaction, again turn the ozone to absorbs longer ultraviolet rays, re-forming oxygen. The radioactive emanations consist of three components: i) gamma rays, which are penetrating radiations of very short wavelength but otherwise like x-rays; ii) alpha particles, positively charged helium nuclei; and iii) beta particles, rapidly moving electrons. The artificial radioactive elements are formed by bombardment with high energy particles such as helium nuclei. The most of the radiation in ultraviolet region of radiation spectrum is absorbed by the ozone in the upper atmosphere, whilst part of the radiation in the shortwave region of the radiation spectrum is scattered by air molecules, for communication of blue colour appearance of sky to our eyes. The strength of the absorption of solar energy varies with wavelength and absorption bands are formed at regions of strong absorption. The important atmospheric gases forming part of absorption bands are ozone ($O_3$), water vapour ($H_2O$), carbon dioxide ($CO_2$), oxygen ($O_2$), methane ($CH_4$), chlorofluorocarbons (CFC) and nitrogen dioxide ($NO_2$).

### *A. Source and Sink of Solar Energy*

The solar energy is radiated from the sun and the earth-atmosphere system absorbs a portion of its incident energy. In addition to the energy received from the sun, the surface of the earth is warmed by a heat flux from its interior that results, primarily, from the decay of radioactive isotopes. The tides, which are a consequence of the earth-moon system, result in viscous friction, another energy input that affects the surface energy balance. To the extent that the earth is not changing, the heat radiated by the surface of the earth is equal to the sum of the heat inputs. The solar energy is absorbed by planet earth and its surrounding environment viz., earth surface, earth atmosphere, forests, farms, rivers, ponds, lakes & seas, living beings and civil structures (e.g. buildings, green houses, thermal power plants, collectors, panels, roads, bridges, ports, canals). Life on earth is completely dependent upon the energy radiated by the sun. All biological processes are either directly or indirectly dependent upon photosynthesis. By photosynthesis green plants convert solar energy into chemical energy. The solar radiation sources are classified as per type of wave of interference. The absorbed sources of waves of interference of particle surface are light, sound, heat, electricity, fluid, fire are function of absorptivity for a solar intensity. The earth's land surface, oceans, and atmosphere absorb solar radiation and this raises their temperature. The earth and its earth-moon system is the sink of the solar energy. Incident solar energy is the dominant energy input. The radiation absorbed by the earth depends upon the earth's cross-sectional area perpendicular to the sun's flux. The earth is behaving as a black body radiator. The radiative temperature of the earth-atmosphere system determines the actual power radiated by the earth.

The radiation of the sun, direct rays from the sun and diffuse rays from the sky, clouds, and surrounding objects incident on a transparent surface of a solar energy absorber is partly transmitted and partly reflected. In addition to this some part of the radiation is absorbed by the selective coating on the surface of a solar energy absorber. The part of the incident flux that is reflected is called the reflectance p, the part absorbed is called the absorptance α, and the part transmitted is called the transmittance τ. The sum of reflectance, absorptance and transmittance is unity, or

$$p + \alpha + \tau = 1 \qquad (7)$$

The radiation incident on the surface of a solar energy absorber has non-constant distributions over the directions of incidence and over the wavelength (or frequency) scale. The radiation properties transmittance, reflectance and absorptance are properties of a specific thickness for a sample of selective material of a solar energy absorber. The emittance ε of the surface of a solar energy absorber is the ratio of the emission of thermal radiant flux from a surface to the flux that would be emitted by a blackbody emitter at the same temperature. The angular dependence for radiation properties is explained through a solid angle formed by all rays joining a point to a closed curve. For a sphere of radius R, the solid angle is the ratio of the projected area A on the sphere to the square of length R. A sphere has a solid angle of 4 rr steradians. The

solar radiation incident on a point at a surface of a solar energy absorber comes from many directions in a conical solid angle. For a cone of half angle θ, the solid angle defined by the circular top and point bottom of that cone is given by

$$\Omega = 2\,rr\,(1-\cos\theta) \qquad (8)$$

In measurement of the transmittance or reflectance, a sample is illuminated over a specified solid angle. The flux is then collected for a given solid angle to measure reflectance or transmittance. A conical solid angle is bound by right circular cone. The source of solar radiation is sunlight. The radiation properties of sunlight necessary for performance analysis of daylighting and lighting are defined as follows:

The luminous flux is the time rate of flow of light. A receiver surface of a solar energy absorber receives watts of sunlight and it emits luminous flux. The measure of the rate of success in converting watts of sunlight to lumens is called efficacy.

The illuminance on a surface of a solar energy absorber is the density of luminous flux incident on that surface. The luminous flux travels outward from a source, it ultimately impinges on many surfaces, where it is reflected, transmitted and absorbed.

Luminous intensity is the force generating the luminous flux. A source of sunlight is described as having a luminous intensity in a particular direction. The inverse square law of illumination states that the illuminance on a surface perpendicular to the line from the point source of sunlight to the surface of a solar energy absorber varies directly with the intensity of the source and inversely with the square of the distance from the source of sunlight to the surface of a solar energy absorber.

The luminance of a source or a sink is defined as the intensity of the source or the sink in the direction of an observer divided by the projected area of the source or sink as viewed by an observer. The luminance of the source or sink in the direction of the observer is the intensity in that direction divided by the projected area.

The luminance exitance is the density of luminous flux leaving a surface of a solar energy absorber. The reflectance is the ratio of the luminous flux reflected from a surface to the luminous flux incident on that surface. The transmittance is the ratio of the luminous flux transmitted through a surface to that incident on the same surface.

Quantity of Sources: Quantity of sources is luminous energy and is related to luminous flux, which is luminous power per unit time.

## VI. Noise Filters

The noise filters are classified as per source signal of unwanted frequencies from solar power, electric power, light power, sound power, heat power, fluid power and fire power [7]. An acoustic filter is an electrical analog circuit of various combinations of RC feedback circuit with an operational amplifier and is used to filter unwanted frequencies of oscillations from a power system [10], [11]. It is a network with selective transmission for currents from a power system of varying frequency. The unwanted frequencies generated from a power system are removed by using an operational amplifier with different combination of filter arrangements. An operational amplifier is an integrated circuit that consists of several bipolar transistors, resistors, diodes, and capacitors, interconnected so that amplification can be achieved over a wide range of frequencies.

The action of filtering the frequency from a power system is based on the variation in the reactance of an inductance or a capacitance with change in frequency. The band of frequencies that can be removed from a power system can be at the low frequency end of frequency spectrum, at the high frequency end, at both ends, or in the middle of the spectrum. The filters to perform each of these operations are known respectively as low-pass filters, high-pass filters, band-pass filters and band-stop filters. There are many configurations of design of filters. The filters are divided into passive and active configurations. The passive filters are less effective simple circuits constructed with resistors, capacitors, and inductors. The active filters are useful in providing an effective filtering action than passive filters. The active filters require a source of operating power.

### *A. Noise Filter Systems*

The criteria for definitions of filters for noise filtering is based on areas of energy stored in a wave due to noise interference, speed of wave and difference of power between two intensities of wave [7]. The filtered noise signals are considered from systems of solar power, electric power, light power, sound power, heat power, fluid power and fire power. The noise filters as per sources of noise are defined.

**Filter for noise of sol:** The filter is used to filter noise due to difference of intensities of power between two solar systems. Example: window curtain, window blind, wall and glass.

**Filter for noise of therm:** The filter is used to filter noise due to difference of intensities of power between two heat power systems. Example: house, insulation, clothing and furnace.

**Filter for noise of photons:** The filter is used to filter noise due to difference of intensities of power between two lighting systems. Example: 3-D vision of any object, electric bulb, television, computer and LCD screen laptop.

**Filter for noise of electrons:** The filter is used to filter noise due to difference of intensities of power between two electrical power systems. Example: AM/FM radio clock with ear phones, telephone instrument with ear phones and CD audio player with ear phones.

**Filter for noise of scattering:** The filter is used to filter noise due to difference of intensities of power between two fluid power systems. Example: electric fan, pump, motor vehicle, river stream and tap water.

**Filter for noise of scattering and lightning:** The filter is used to filter noise due to difference of intensities of power between two fire power systems. Example: lighter, matchstick, gas stove, locomotive engine and thunder-bolt.

**Filter for noise of elasticity:** The filter is used to filter noise due to difference of intensities of power between two

sound power systems. Example: your vocal apparatus, organ pipe, thunder-bolt and drum beats.

## VII. Some Examples of Noise Filters

Some examples of noise filters are enumerated as under [7].

### A. Human Voice Production

The example of phonetics of filtering sound of a human speech is illustrated. The human speech is synthesized due to development of stresses at vocal folds [12], [13]. The smoothening of the sound is function of its amplitude and its shape of oscillations at vocal tract of a human being. The vocal tract is a resonant cavity wall with sound energy stored in oscillations of its vocal folds. The vocal apparatus showing mechanism of synthesis of human speech is illustrated in Figure 1.

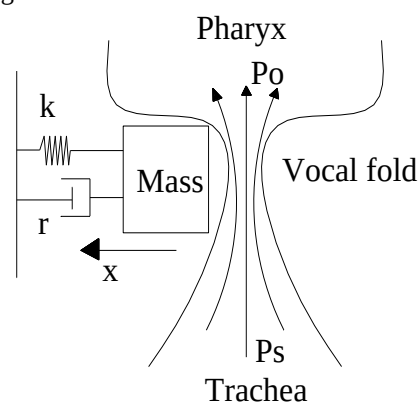


Figure 1. A human vocal mechanism

### B. An Airflow Window with a Photovoltaic Solar Wall

The filtering of solar energy is illustrated through an example of an airflow window attached with a shading device. An airflow window is fixed with a movable roller blind to control the transmission of daylight as well as amount of solar heat. The bottom portion of photovoltaic solar wall is used for controlling the amount of air ventilation along with generation of solar electric power. The example is illustrated in Figure 2.

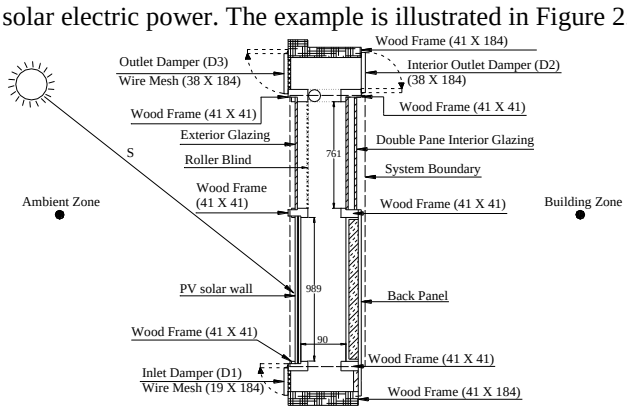


Figure 2. An Airflow window with a Photovoltaic Solar Wall (Dimensions shown are in mm).

### C. Psychrometric Air Conditioner

An elementary air conditioner for summer comfort conditioning consists of a cooling coil, a cooling fluid with a filter [14]. The schematic of operation of a psychrometric air conditioner is illustrated in Figure 3.

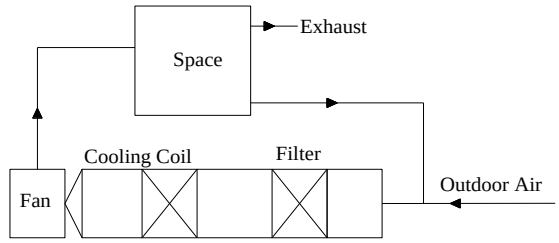


Figure 3. A psychrometric air conditioner

### D. Telephone Line

The impedance of a telephone line is composed of distributed resistance, capacitance, and inductance [15]. The impedance is a function of the length of the loop, the type of insulation of the wire, and whether the wire is aerial cable, buried cable, or bare parallel wires strung on telephone pole. A telephone line is usually supplied with a 48 VDC from the telephone exchange. The schematic of operation of a telephone line with telephone instrument is illustrated in Figure 4.

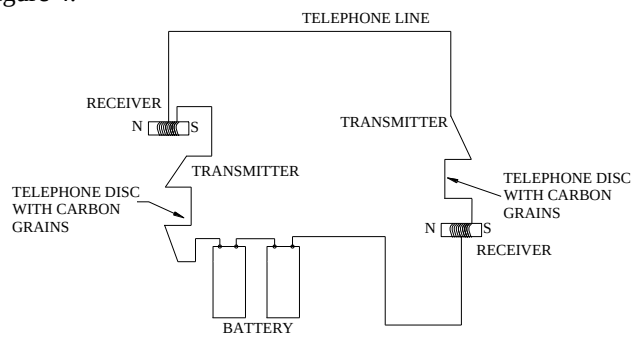


Figure 4. Operation of a Telephone Line.

### E. Fire and Smoke Detection System

A fire detection system consists of a control system with interconnected alarms, smoke and heat detectors. A fire detector is a device which is used for presetting an alarm at a particular temperature. A smoke detector is a device which is used for presetting an alarm when a certain percentage of smoke accumulates. The photovoltaic cell activates the smoke alarm only if it senses requisite obscuration of light over a unit area with control from BMS [16]. The schematic of various components for fire detection system is illustrated in Figure 5.

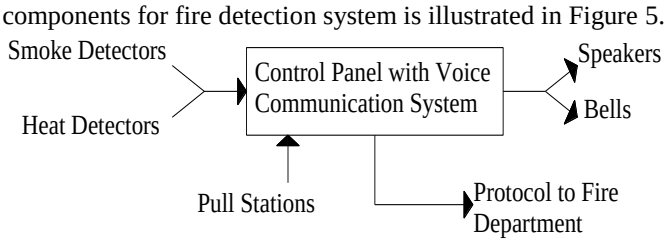


Figure 5. A fire detection system.

## VIII. Sensors and Transducers For a Human Brain

Your body has feedback systems that regulate the internal environment of your body. The feedback systems make use of storage depots and numerous feedback loops. The monitoring of plasma calcium is a good example of negative feedback.

The bones constitute large storage depots for calcium, for the plasma to withdraw these storage supplies in times of need. Our body's homeostatic regulatory systems are represented by feedback loops. The feedback is considered negative, when it is compensating or negates any change. The negative feedback is essential to stabilize a system.

The gastrointestinal tract, the lungs, the kidneys, and skin of your body make exchange of materials and energy between the internal and the external environments. A steady state is achieved by regulatory mechanisms involving the balance between the inflow and outflow of the internal environment that stabilizes the composition of the internal environment. The tendency to regulate the internal environment so that it is maintained in a steady state is called homeostasis [5].

The coordination of the activities of the various sensory organs within your body is controlled by the secretion of hormones and by transmission of nerve impulses. The nerve impulses travel along axons. The sensory nerve axons carry impulses from different parts of your body to the central nervous system (brain and spinal cord). Although parts of your brain involved in various physiological functions have been located, research attempts to localize complex behaviour patterns in sensory areas of your brain have failed. The sensory areas are located for the impulses on the cortex. The motor areas are also located where "command" impulses leave the cortex. The cerebellum receives impulses from sensory receptors and interacts with motor cortex, insuring smooth muscular movements. The reticular formation receives sensory impulses from the environment and sends impulses to the cortex.

The keeping of face beard (facial hair) and wearing of a knitted head cloth (*patka*) and a turban (*pag*) on your body has a logical and a scientific significance. The daily self-making folds of hair knots and making round folds of turban over the head of your body with colourful cotton cloths has following historical, medical benefits: i) it indicate, protects and concentrate the disciplinary physical and mental strength of a person; ii) it gives hair tonic to the growth of hairs on your body due to solar energy; iii) the whole system acts as an acoustic filter and provides immunity to your body; and iv) the folded *Patka* with style, folded design of hair knots on top of your head is your identity in time domain, the face beard on your body is a measuring ration and a sign of man, the turban with style, colour, design is your identity in space domain.

**Heat Stress:** Your body acts as a solar energy absorber, which enable your senses for interpretation of our surrounding environment. Your body when exposed to solar radiation releases heat by radiation and conduction. The amount of heat you loose is a function of the difference in temperature between the surface of your body and the environment. The greater is the difference in temperature, the greater the heat loss would be. The heat would be released from your body, if the surface temperature of your body is higher than that of the environment. If due to excessive solar radiation, the environmental temperature rises above your body temperature, you will gain heat from the environment.

Another important method of losing heat is through evaporation. After swimming, when you come out of the water, there is evaporation of water from your skin and you feel cool. The water molecules on your body surface must have minimum amount of energy for evaporation. The faster moving water molecules can overcome the forces holding them in the liquid state and bound off into the air as water vapour molecules. The slower and therefore cooler molecules are left behind. Heat then flows from the warmer surface of your skin to the cooler water molecules. This flow of heat transfers energy to the water, speeding the water molecules up so that more of them escape. This cooling of your skin surface also cools any blood which tends to flow through that part of your body. Sweating is a noticeable way to lose heat by evaporation. During the process of sweating, water continuously evaporates from your skin. There is also a small loss of water from the surface of the lungs when you breathe. The amount of water that evaporates, when you breathe or sweat, depends on the humidity of the air. When the humidity of the surrounding air is high, water evaporates much more slowly and therefore contributes less to the cooling process.

**Effects of intense heat:** Your presence in a room with high air temperature, radiation and conduction do not work in your favour for loss of body heat. Instead of losing heat from the surface of your body to the surroundings, you gain heat. You can survive, but now sweating is the only mechanism you have for losing heat. The normal response of your body is intense heat strains of the circulatory system. This follows because the hypothalamus responds to the increased heat by causing the blood vessels in your skin to expand. This leads to a decreased resistance to blood flow and your blood pressure tends to fall. Reflexes which prevent large changes in blood pressure then begin to operate and the decreased resistance to blood flow is compensated for by the heart working harder. The expanded blood vessels make it possible for large amounts of blood to pool in the vessels of your skin at the expense of other organs. If as a result, the blood supply to your brain becomes sufficiently low, you will faint.

Sweating may also create a circulatory problem because of the salt and water loss. Excessive fluid loss causes a decreased plasma volume. This may slow down the output of blood from the heart, which could lead to decreased blood flow to the skin, which in turn could reduce sweating. If this happened, your main avenue for heat loss would be closed. In that event heat production would continue and your body temperature would rise until your whole system is collapsed. The body's ability to control heat loss is limited. When heat cannot be lost rapidly enough to prevent a rise in body temperature, a vicious circle may occur. When heat regulation fails, the positive feedback loop (Heat production – metabolism – temperature control) goes into operation; if unchecked it ends in heat stroke and death.

## IX. Comfort and Health

The ASHRAE handbook of fundamentals has provided a detailed discussion of the physiological principles of human thermal comfort [17]. The amount of heat generated and dissipated by your body varies considerably with activity and

age as well as with size and gender. The complex regulatory system of your body act to maintain the temperature of your body to about 36.9 °C regardless of the environmental conditions.

The environmental factors that affect thermal balance of your body for influencing thermal comfort are [18]: i) the dry bulb temperature of the surrounding air; ii) the humidity of the surrounding air; iii) the relative velocity of the surrounding air; iv) the temperature of any surfaces that are in direct view to any part of your body and thus exchange radiation. In addition the personal variables that affect the thermal comfort of your body are activity and clothing. The physiological mechanisms that your body uses to control your body temperatures are metabolism, blood circulation, near the surface of the skin termed as cutaneous blood circulation, respiration and sweating. The metabolism rate determines the rate at which energy is converted from chemical to thermal form within your body and blood circulation controls the rate at which the thermal energy is carried forward to the surface of your skin. In respiration, air is taken in at ambient conditions but leaves saturated with moisture and very near the temperature of your body. The sweating has a significant effect on the rate at which energy is carried away from the skin of your body by heat and mass transfer.

The energy generated by metabolism rate of your body varies considerably with the activity of your body. A unit to express the metabolic rate per unit of area of your body is termed as met (1 met = 58.2 W $m^{-2}$), defined as the metabolic rate for your body while seated quite (called sedentary). The variable which affects the comfort of your body is the type and amount of clothing that you are wearing. The insulation of clothing is defined as a single equivalent uniform layer over your whole body. The insulation value for clothing of your body is expressed in terms of clo units (1 clo=0.155 $m^2CW^{-1}$). A heavy business suit with accessories has insulation value of 1 clo, whereas a pair of shorts has 0.05 clo. ASHRAE Standard 55 provides comfort conditions for an acceptable thermal environment [18]. The most comfort studies involve use of the ASHRAE thermal sensation scale. The scale relates words describing thermal sensations to a corresponding number. These are enumerated below:

+3 hot
+2 warm
+1 slightly warm
0 neutral
-1 slightly cool
-2 cool
-3 cold

The operative temperature is the average of the mean radiant and ambient air temperatures, weighted by their respective heat transfer coefficients. Energy balance equations are developed that use a predicted mean vote (PMV) index. The PMV index predicts the mean response of a large group of persons. The coordinates of the comfort zones are:

Winter: Operative temperature of 20 to 23.5 °C at 18 °C wet bulb temperature; operative temperature of 20.5 to 24.5 °C at 2 °C dew point.

Summer: Operative temperature of 22.5 to 26 °C at 20 °C wet-bulb temperature; operative temperature of 23.5 to 27 °C at 2 °C dew point.

The loss of hearing is a serious occupational hazard. Factory workers, truck drivers and other workers are exposed to noise levels that are harmful. The continuous exposure to harmful noise level results in hearing impairment of your ear. The federal Occupational Safety and Health Administration (OSHA) in the Department of Labour has maintained noise exposure limits. The noise exposure is expressed in daily noise for an 8-hour shift.

## APPENDIX

Proposed Book

**Noise Behaviour: Paradigm & Therapy**
**In New Dimensions**

Contents

1. Introduction
2. Stresses & Oscillations (incl. Physical Agents, Environmental Stressors)
3. Psychoacoustics: Redefining in New Dimensions
4. Noise Sources & Noise Systems
5. Noise Measurements
6. Solar Energy Acoustics (incl. Radiation, Heat Stress etc.)
7. Physiological Responses: Environmental Health & Noise
8. Human Noise Behaviour & Cellular Physiology (incl. Neurotransmitters, Serotonin etc.)
9. Noise Sinks: Psychological Effects & Surveys
10. Noise Protection & Immunity (incl. Human Senses, Wellness, Mind & its Control)
11. Noise Monitoring & Instrumentation (incl. A Slide Rule for Noise Measurement; Sensors, Transducers and Biomedical instrumentation for Noise due to physical agents like heat stress, extreme cold, low pressure, drinking, smoking, breathing, physical activity etc.)
12. Noise Filters & Control (incl. Noise Filter Configurations, Built Environment, Insulation, HVAC, Comfort, Signal Processing, Policies: Noise Control Laws, Legislations and Taxes etc.)
13. Appendices: Databases of standard/reference noise values of various systems, situations etc.

Target audiences are general public health practitioners; environmental health and built environment researchers; and general medical interest psycho-acoustics professionals.

## REFERENCES


[1] H. Dehra, "A Unified Theory for Stresses and Oscillations", *Proc. Canadian Acoustical Association (CAA) Montréal 2007 Conf, Concordia University,* Montréal, Québec, Canada (2007) pp. 132-133.

[2] H. Dehra, "Power Transfer and Inductance in a Star Connected 3-phase RC Circuit Amplifier", *Proc. AIChE 2008 Spring Meeting,* New Orleans, LA, USA (2008), session 96a.

[3] H. Dehra, "The Noise Scales and their Units", *Proc. Canadian Acoustical Association (CAA) Vancouver 2008 Conf,* Vancouver, B.C., Canada (2008) pp. 78-79.

[4] H. Dehra, "A Benchmark Solution for Interference of Noise Waves", *Proc. AIChE 2009 Spring Meeting*, Tampa, FL, USA (2009), session 67c.
[5] H. Dehra, "A Guide for Signal Processing of Sensors and Transducers", *Proc. AIChE 2009 Spring Meeting*, Tampa, FL, USA (2009), session 6b.
[6] H. Dehra, "Solar Energy Absorbers", chapter 6 in *Solar Collectors and Panels, Theory and Applications*, edited by Reccab Manyala, Sciyo Publication, pp. 111-134, 2010.
[7] H. Dehra, "Acoustic Filters", chapter 5 in *Ventilation: Types, Standards and Problems* edited by Vincent A. Romano and Allison S. Duval, Nova Publishers, pp. 135-154, 2012.
[8] H. Dehra, "A Theory of Acoustics in Solar Energy", *Natural Resources*, **4 (1A),** 116-120 (2013).
[9] H. Dehra, "A Novel Theory of Psychoacoustics on Noise Sources, Noise Measurements and Noise Filters", INTER-NOISE and NOISE-CON Congress and Conference Proceedings, NoiseCon16, Providence, Rhode Island, pp.933-942, 13-15 June, 2016, Publisher: Institute of Noise Control Engineering, USA
[10] V. Del Toro (1986). *Electrical Engineering Fundamentals*, 2nd ed., Prentice-Hall of India, New Delhi, India.
[11] Robert H. Randall (1951). *An Introduction to Acoustics*, Dover Publications, USA.
[12] Ingo R. Titze (1994). *Principles of Voice Production*, Prentice Hall, Englewood Cliffs, NJ, USA.
[13] J. C. Lucero (2005). Dynamics of the vocal fold oscillation, *TEMA Tend. Mat. Apl. Comput.*, 6, No. 1, 11-20.
[14] J.L Threlkeld (1962). *Thermal Environmental Engineering*, Englewood Cliffs, NJ, USA.
[15] H. Dehra, Proccedings, of 21st CANCAM, *A heat transmission model for a telephone line*, Department of Mechanical and Industrial Engineering, Ryerson University, Toronto, Ontario, Canada, June 3-7, 2007, 356-357 (2007).
[16] H. Michael Newman. *Direct Digital Control of Building Systems*, John Wiley and Sons, New York, USA (1994).
[17] ASHRAE Handbook, *Fundamentals Volume* (1997), American Society for Heating, Refrigerating and Air-Conditioning Engineers, Inc., Atlanta, GA, USA (1997).
[18] ANSI/ASHRAE Standard 55-2004. Thermal environmental conditions for human occupancy, American Society of Heating, Refrigerating and Air-Conditioning Engineers, Inc., Atlanta, GA, USA (2004).